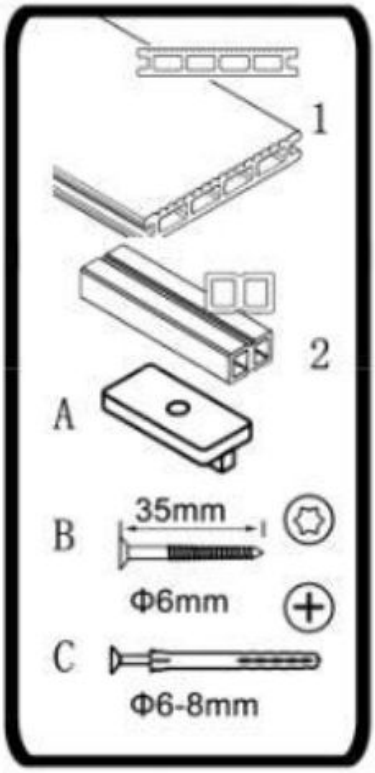
1
2
A
B
35mm
Φ6mm
C
Φ6-8mm

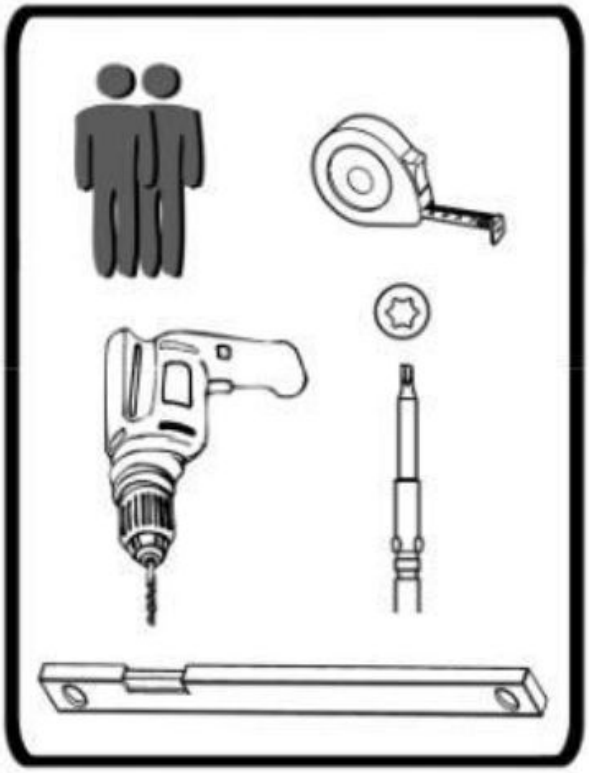

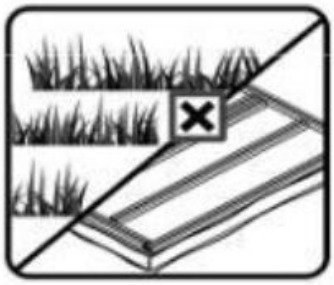

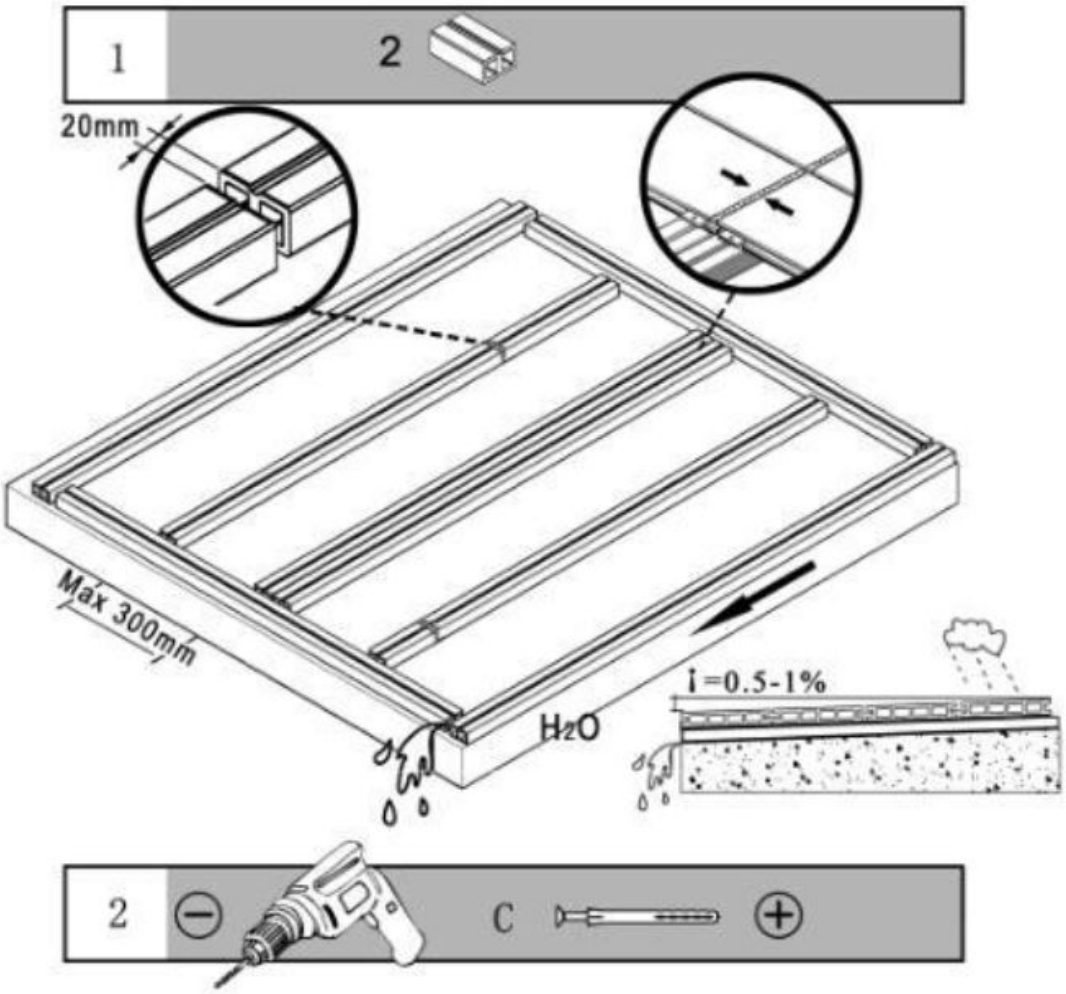
1
2
20mm
Max 300mm
H2O
i=0.5-1%
2
C

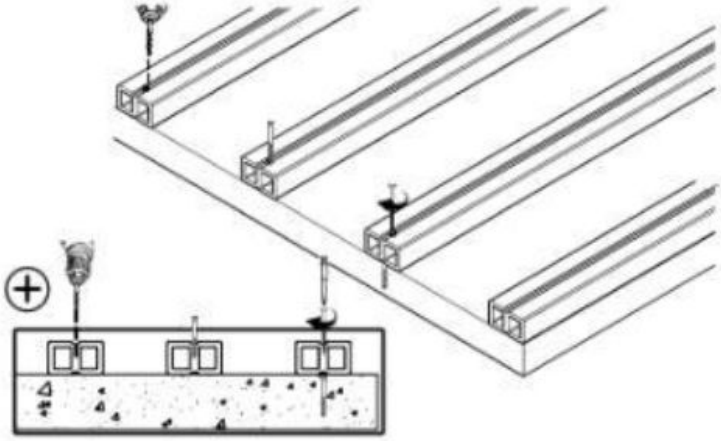

3	A 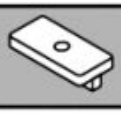 1 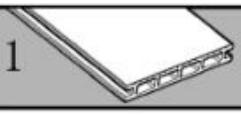 B

①

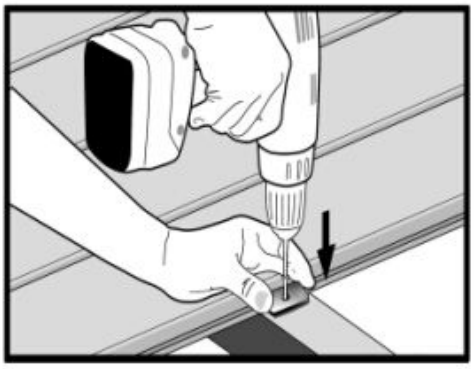

②

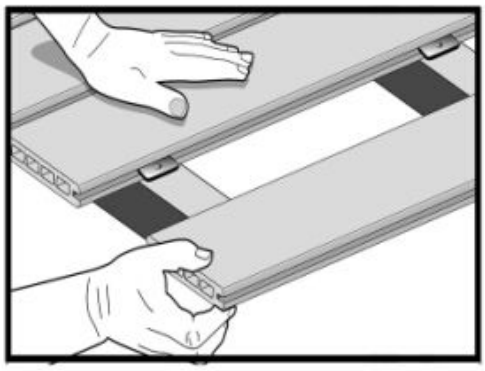

③

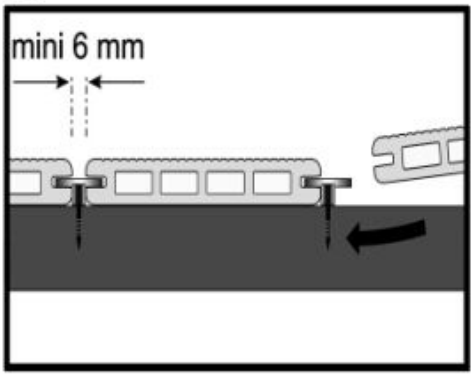
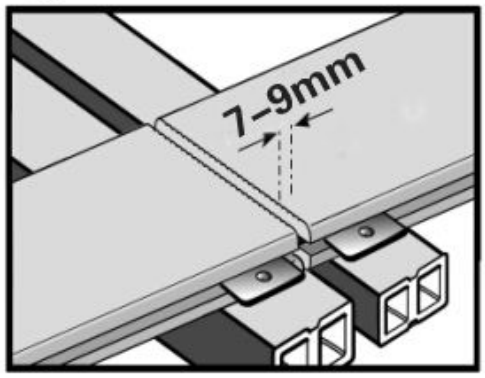
④